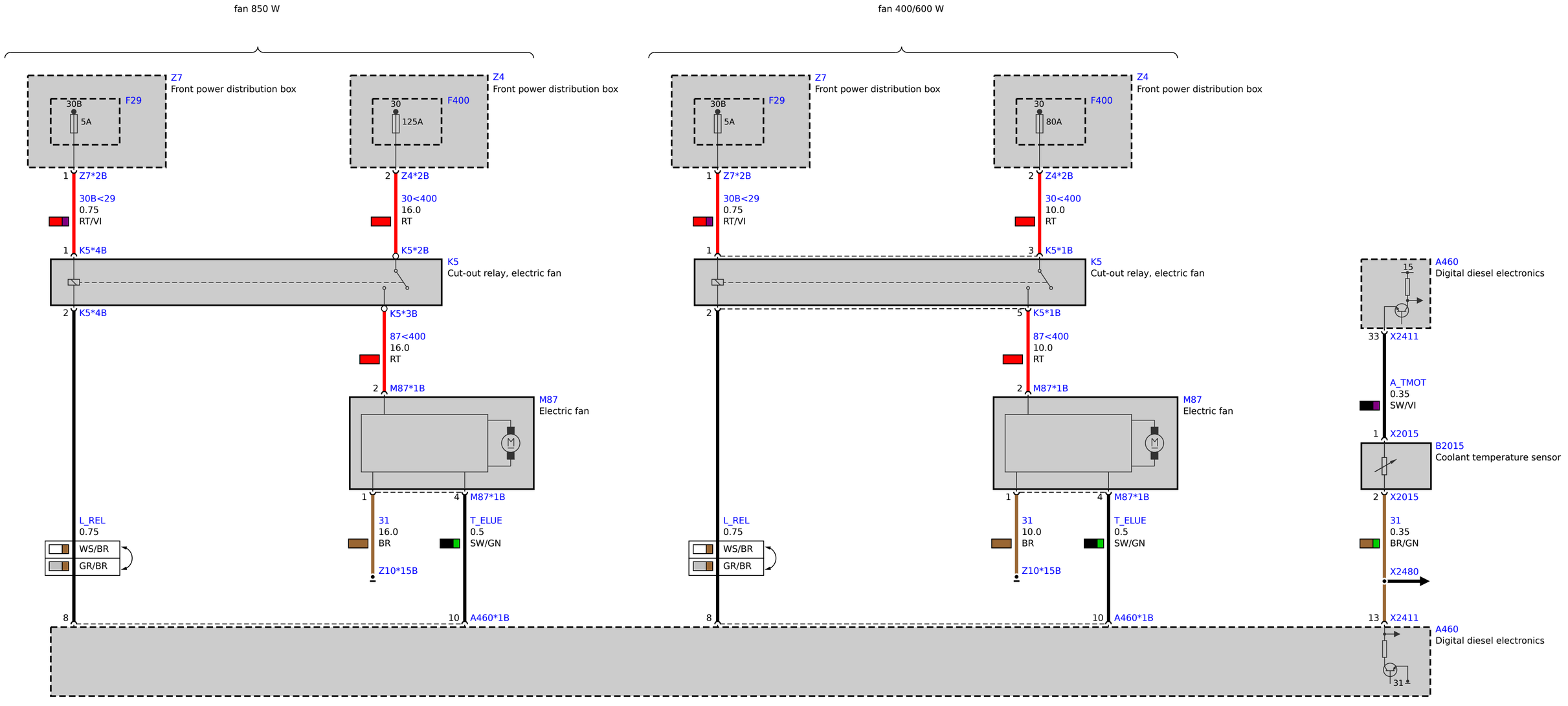
fan 850 W
fan 400/600 W
Z7
Front power distribution box
F29
30B
5A
Z4
Front power distribution box
F400
30
125A
80A
1 Z7*2B
2 Z4*2B
30B<29
0.75
RT/VI
30<400
16.0
10.0
RT
1 K5*4B
2 K5*4B
K5*2B
3 K5*1B
5 K5*1B
K5
Cut-out relay, electric fan
K5*3B
87<400
M87*1B
M87
Electric fan
1
4 M87*1B
31
BR
T_ELUE
0.5
SW/GN
Z10*15B
L_REL
WS/BR
GR/BR
8
10 A460*1B
A460
Digital diesel electronics
15
33 X2411
A_TMOT
0.35
SW/VI
1 X2015
B2015
Coolant temperature sensor
2 X2015
BR/GN
X2480
13 X2411
31