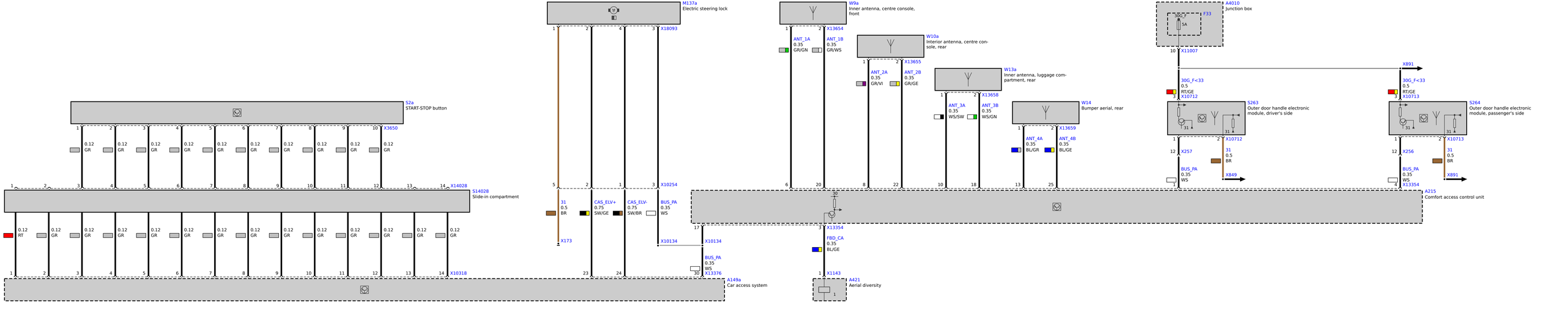
S2a
START-STOP button
X3650
X14028
S14028
Slide-in compartment
X10318
M137a
Electric steering lock
X18093
X10254
X173
X10134
BUS_PA
0.35
WS
X13376
A149a
Car access system
W9a
Inner antenna, centre console, front
X13654
ANT_1A
0.35
GR/GN
ANT_1B
0.35
GR/WS
W10a
Interior antenna, centre con-sole, rear
X13655
ANT_2A
0.35
GR/VI
ANT_2B
0.35
GR/GE
W13a
Inner antenna, luggage com-partment, rear
X13658
ANT_3A
0.35
WS/SW
ANT_3B
0.35
WS/GN
W14
Bumper aerial, rear
X13659
ANT_4A
0.35
BL/GR
ANT_4B
0.35
BL/GE
X13354
FBD_CA
0.35
BL/GE
X1143
A421
Aerial diversity
A215
Comfort access control unit
A4010
Junction box
F33
30G_F
5A
X11007
X891
30G_F<33
0.5
RT/GE
X10712
X10713
S263
Outer door handle electronic module, driver's side
S264
Outer door handle electronic module, passenger's side
X257
X256
31
0.5
BR
X849
X13354