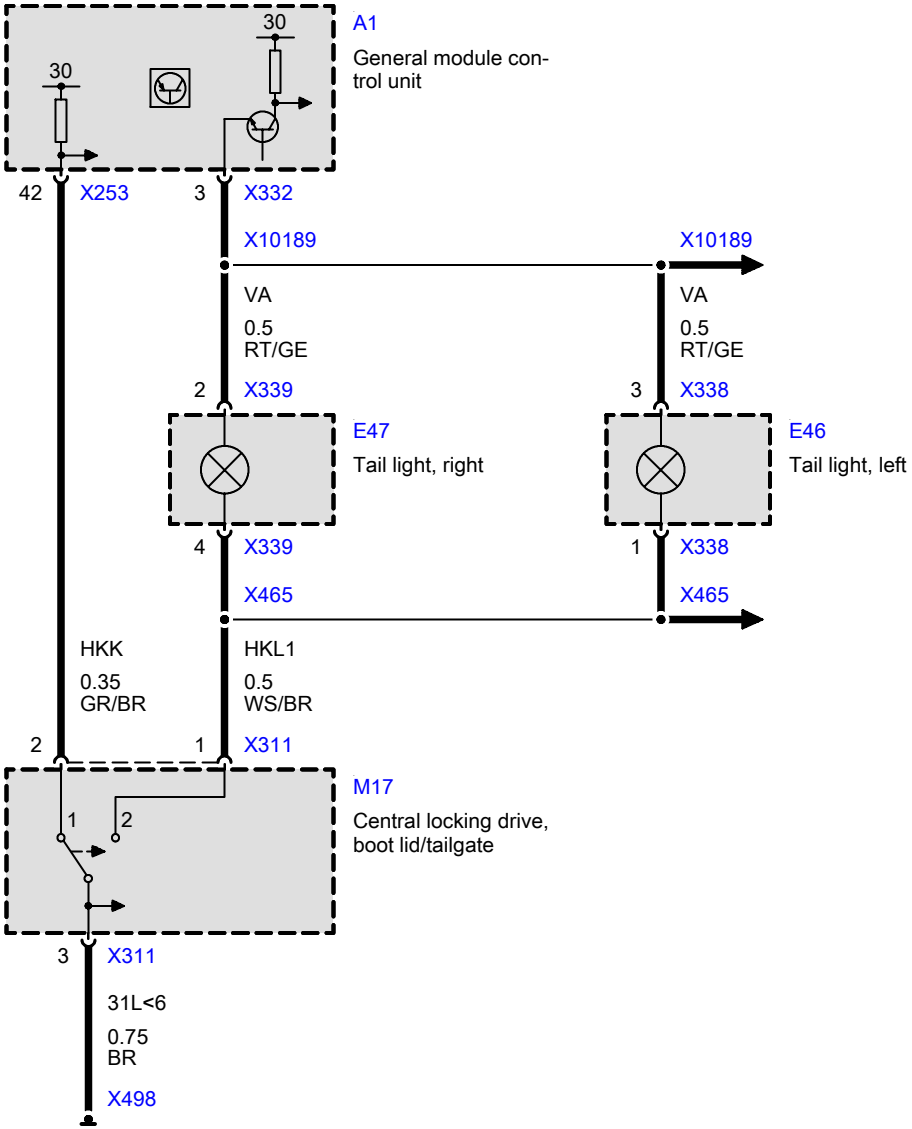
A1
General module control unit
30
30
42
X253
3
X332
X10189
X10189
VA
0.5
RT/GE
VA
0.5
RT/GE
2
X339
3
X338
E47
Tail light, right
E46
Tail light, left
4
X339
1
X338
X465
X465
HKK
0.35
GR/BR
HKL1
0.5
WS/BR
2
1
X311
M17
Central locking drive, boot lid/tailgate
1
2
3
X311
31L<6
0.75
BR
X498