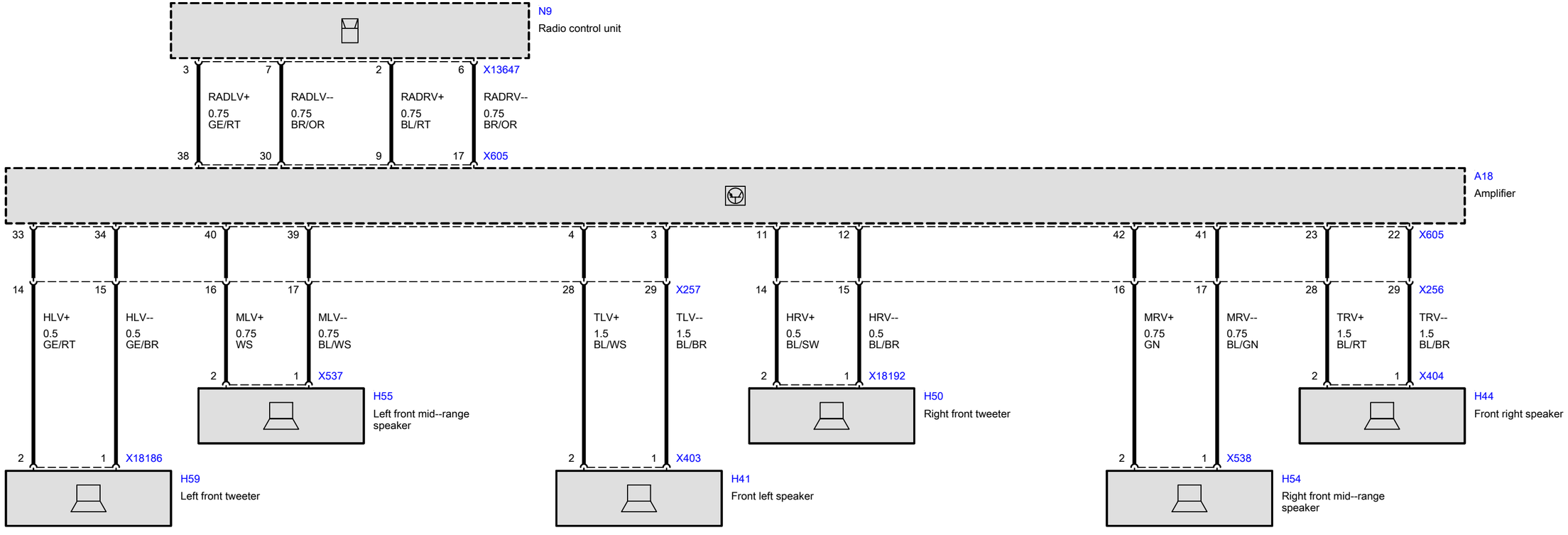
N9
Radio control unit
3
7
2
6
X13647
RADLV+
0.75
GE/RT
RADLV--
0.75
BR/OR
RADRV+
0.75
BL/RT
RADRV--
0.75
BR/OR
38
30
9
17
X605
A18
Amplifier
33
34
40
39
4
3
11
12
42
41
23
22
X605
14
15
16
17
28
29
X257
14
15
16
17
28
29
X256
HLV+
0.5
GE/RT
HLV--
0.5
GE/BR
MLV+
0.75
WS
MLV--
0.75
BL/WS
TLV+
1.5
BL/WS
TLV--
1.5
BL/BR
HRV+
0.5
BL/SW
HRV--
0.5
BL/BR
MRV+
0.75
GN
MRV--
0.75
BL/GN
TRV+
1.5
BL/RT
TRV--
1.5
BL/BR
2
1
X537
2
1
X18192
2
1
X404
H55
Left front mid--range speaker
H50
Right front tweeter
H44
Front right speaker
2
1
X18186
2
1
X403
2
1
X538
H59
Left front tweeter
H41
Front left speaker
H54
Right front mid--range speaker