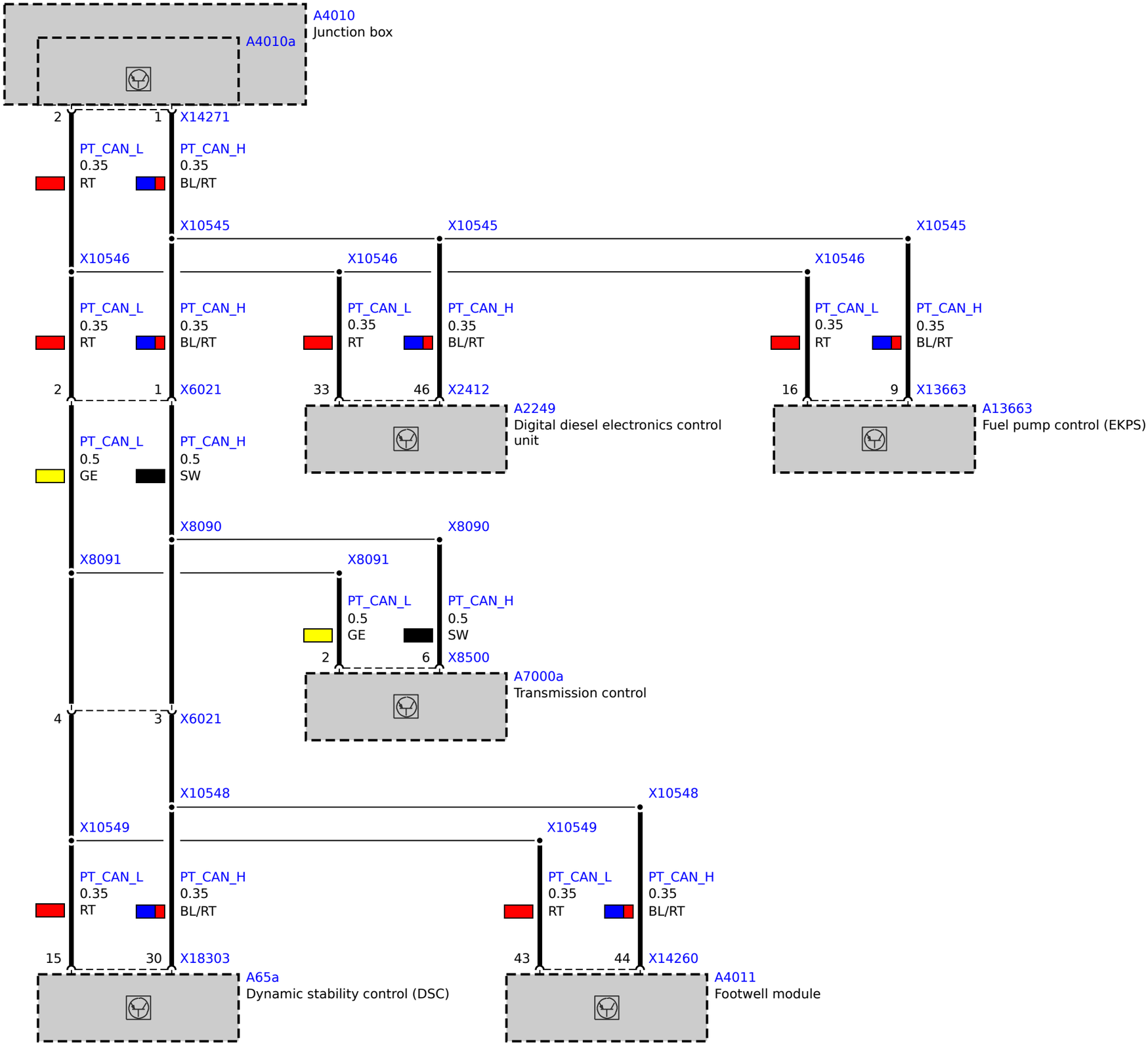
A4010
Junction box
A4010a
2
1
X14271
PT_CAN_L
0.35
RT
PT_CAN_H
0.35
BL/RT
X10545
X10545
X10545
X10546
X10546
X10546
PT_CAN_L
0.35
RT
PT_CAN_H
0.35
BL/RT
PT_CAN_L
0.35
RT
PT_CAN_H
0.35
BL/RT
PT_CAN_L
0.35
RT
PT_CAN_H
0.35
BL/RT
2
1
X6021
33
46
X2412
16
9
X13663
A2249
Digital diesel electronics control unit
A13663
Fuel pump control (EKPS)
PT_CAN_L
0.5
GE
PT_CAN_H
0.5
SW
X8090
X8090
X8091
X8091
PT_CAN_L
0.5
GE
PT_CAN_H
0.5
SW
2
6
X8500
A7000a
Transmission control
4
3
X6021
X10548
X10548
X10549
X10549
PT_CAN_L
0.35
RT
PT_CAN_H
0.35
BL/RT
PT_CAN_L
0.35
RT
PT_CAN_H
0.35
BL/RT
15
30
X18303
43
44
X14260
A65a
Dynamic stability control (DSC)
A4011
Footwell module